AXEL FIRE PIT TABLE

EYE-CATCHING MODERN DESIGN

It’s all in the details with the Axel Gas Fire Pit Table! This square fire pit table encompasses the favorite elements of rustic, industrial design with a simplistic, modern approach. The unique construction pairs with the warm glow of the flames for a welcoming look and feel on your deck or patio. The Crystal Fire® Burner is UL Listed for safety and quality.

FEATURES:

- Jet Grey powder-coated steel construction
- 16" Round Crystal Fire® Burner - 55,000 BTUs
- Grey tempered glass burner cover included
- Access door conceals standard 20 lb. propane tank in base
- Optional glass guard and protective cover sold separately
- Product is set up for liquid propane but can be converted to natural gas using included conversion kit
- UL Listed, Made in the USA

THE OUTDOOR GREATROOM COMPANY

PRODUCT INFORMATION:

CDN MSRP APR 2020

ITEM	ITEM CODE	CDN RETAIL PRICE
Axel Gas Fire Pit Table	AX-16	$2,641.13

OPTIONAL ACCESSORIES:

ITEM	ITEM CODE	CDN RETAIL PRICE
Glass Wind Guard	GLASS GUARD-2424	$339.31
Protective Cover	CVR3939	$117.65

Refer to the fire media sell sheet for additional media options. 2 bags of fire media are recommended for the 16” Round Crystal Fire® Plus Burner.
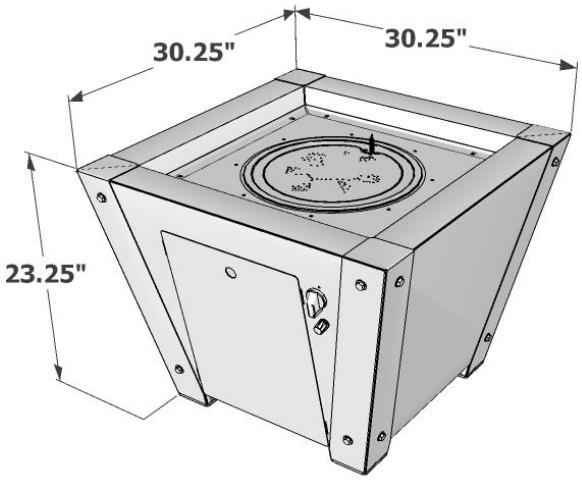
DIMENSIONS: